Model 303022SP
Service & Operating Manual

Non-Potable Use Only

OPERATING INSTRUCTIONS

THE PUMP: This pump is a totally enclosed, submersible dewatering unit. It is powered by a 1/3 HP, 12 volt DC 30 AMP motor. Battery clips on the power cord allow easy connection to any 12 volt vehicle battery.

SWITCHING: The on-off switch is located on the power cord.

CONNECTING TO BATTERY: When connecting the clips to a battery, arcing is eliminated by keeping the on-off switch in the "off" position. Connect the red battery clamp to the positive (+) battery terminal. Connect the black battery clamp to ground: preferably on the vehicle's engine to a solid, metallic, stationary point. The connection should be at least 18 inches (480mm) from the battery.

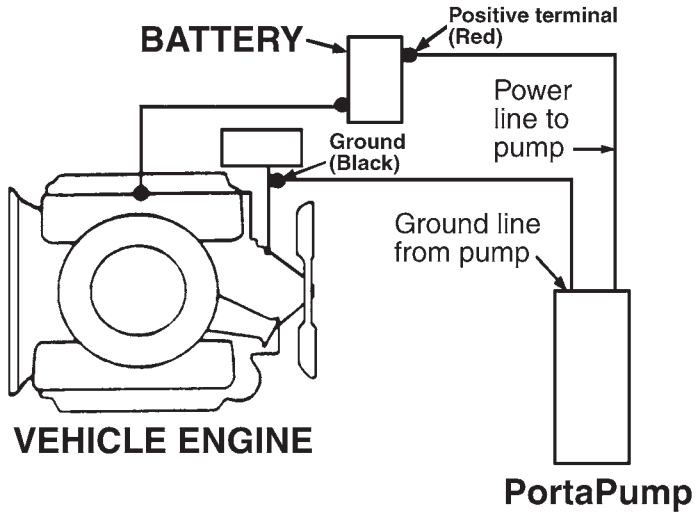

HOSE: Since the pump develops relatively low pressure, it is recommended that non-collapsible hose be used for maximum pumping rates.

HOISTING & LOWERING: Attach a line to the metal handle on the top of the pump for hoisting or lowering the unit. **Do not use power cable for handling unit.**

TO OPERATE: Lower unit into liquid to be pumped and activate switch. Pump can be run for a few minutes without liquid, however, **do not run completely dry for extended periods.** Damage to shaft seal may result.

RUNNING TIME: This unit draws about 30 amperes and can be operated about 1 hour on a fully charged 55 AMP-hour battery and still permit starting of vehicle under normal conditions. Caution should be used when running time exceeds 30 or 40 minutes without engine running to recharge battery, particularly in cold weather when battery efficiency is lowered. Battery size (AMP-hour rating) and the use of other accessories such as lights and radios, etc., must be taken into consideration for practical running periods without engine running.

OVERLOAD PROTECTION is provided by means of a 40 amp automatic reset circuit breaker, located under top cover.

⚠ IMPORTANT

Read these safety warnings and instructions in this manual completely, before installation and start-up of the pump. It is the responsibility of the purchaser to retain this manual for reference. Failure to comply with the recommendations stated in this manual will damage the pump, and void factory warranty.

⚠ CAUTION

Before pump operation, inspect all gasketed fasteners for looseness caused by gasket creep. Re-torque loose fasteners to prevent leakage. Follow recommended torques stated in this

⚠ WARNING

Before maintenance or repair, shut off the compressed air line, bleed the pressure, and disconnect the air line from the pump. The discharge line may be pressurized and must be bled of its pressure.

⚠ WARNING

In the event of diaphragm rupture, pumped material may enter the air end of the pump, and be discharged into the atmosphere. The air exhaust must be piped to an appropriate area for safe disposition.

⚠ WARNING

Take action to prevent static sparking. Fire or explosion can result, especially when handling flammable liquids. The pump, piping, valves containers or other miscellaneous equipment must be grounded.

TROUBLESHOOTING

NOTE: Most common cause of failure to run is due to hardened mud and sand at impeller. Remove strainer to check.

MOTOR WILL NOT RUN:

1. Poor connection at battery.
2. Impeller locked with foreign material.
3. Insufficient impeller clearance.
4. Damaged power cable or loose connection internally in motor assembly.
5. Bad switch or circuit breaker. Connect power leads direct to motor leads to check.
6. Worn motor brushes or out of position to make contact with armature.

PERFORMANCE LOW:

1. Strainer screen partially plugged.
2. Impeller rubbing. Check freeness of rotation with screwdriver inserted through hole in base plated into slotted end of shaft.
3. Battery not fully charged.
4. Discharge restriction such as kinked hose or excessive discharge head.

Motor runs backwards:

1. Check wiring for correct polarity.

SERVICE AND REPAIR INSTRUCTION

DISASSEMBLY: Impeller and shaft seal can be inspected and serviced from lower end of pump by removal of 4 capscrews securing base plate, strainer screen, and suction cover. Screwdriver slot is provided in end of motor shaft to turn shaft while holding impeller for removal. This permits removal of impeller without disassembly of upper motor housing to hold motor shaft. Alternately, there is a shaft extension with two flats on the rear of the motor for use when the impeller is difficult to remove. The upper motor cover must be removed to expose this shaft extension.

To service motor remove 4 hex nuts and bump top cover free from housing tube. Raise sufficiently to disconnect power cable connections. Slide housing tube up from pump casing and motor will be exposed for service or removal.

When servicing the pump and replacing the impeller (part number 444.001.010.)or suction cover (part number 258.001.157.) follow these instructions:The impeller has been revised to typically require 1 shim (previously 7). The suction cover has been revised to require 1 gasket (previously 5).

IMPORTANT: Make certain that wire leads are installed per diagram below.
Install top cover as indicated by arrow and instruction on top of cover. Make sure wires do not contact motor shaft when installing motor cover.

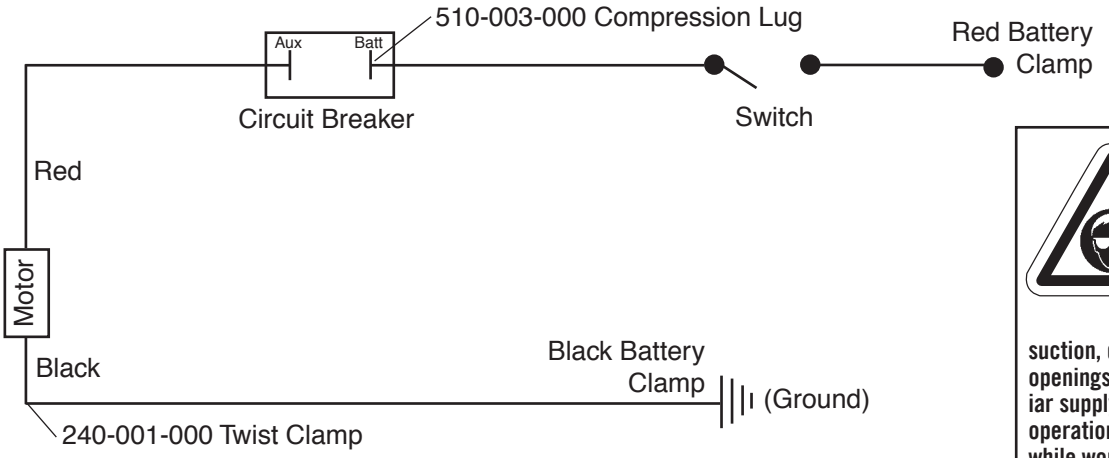

⚠ WARNING

Do not smoke near the pump or use the pump near an open flame. Fire or explosion could result.

⚠ WARNING

This pump must not be used for fluid transfer into aircraft.

⚠ WARNING

This pump is pressurized internally with air pressure during operation. Always make certain that all bolting is in good condition andthat all of the correct bolting is reinstalled during assembly.

⚠ WARNING

When used for toxic or aggressive fluids, the pump should always be flushed clean prior to disassembly.

⚠ WARNING

Airborne particles and loud noise hazards. Wear ear and eye protection.

⚠ WARNING

Before doing any maintenance on the pump, be certain all pressure is completely vented from the pump, suction, discharge, piping, and all other openings and connections. Be certain the iar supply is locked out or made non-operational, so that it cannot be started while work is being done on the pump. Be certain that approved eye protection and protective clothing are worn all times in teh vicinity of the pump. Failure to follow these recommendations may result in serious injury or death.

Parts Numbers for 303022SP

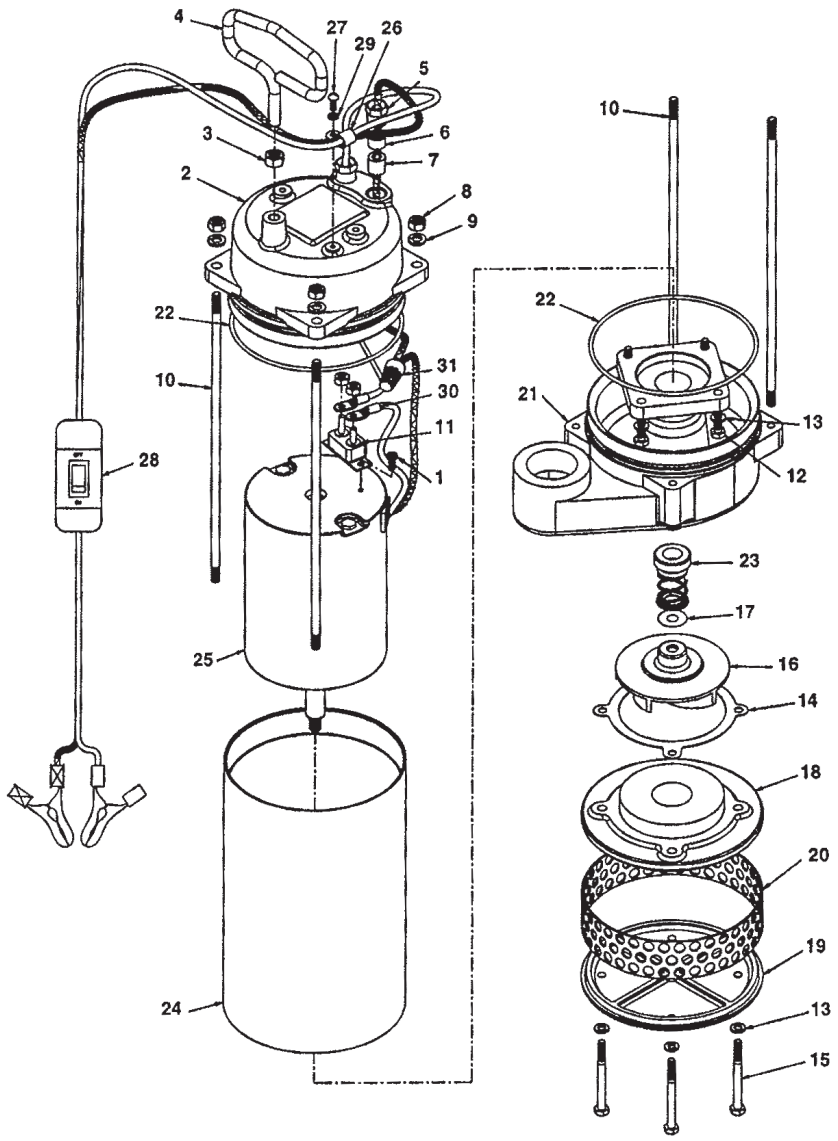

Item No.	Part #	Plate #	Vender Part#	Description
1	6195-258	303022STSC	710-004-330	Self-tapping screw
2	6195-259	303022MTCV	258-017-157	Motor cover
3	6195-260	303022HNUT	545-005-330	Hex nut
4	6195-261	303022HNDL	405-009-000	Handle
5	6195-262	303022GLNT	543-001-162	Gland nut
6	6195-263	303022GLSP	770-007-162	Gland spacer
7	6195-264	303022SLRG	675-016-360	Sealing ring
8	6195-265	303022HXNT	545-004-330	Hex nut
9	6195-266	303022LKWS	900-004-330	Lock washer
10	6195-267	303022STUD	807-011-330	Stud
11	6195-268	303022CRBK	270-001-000	Circuit breaker
12	6195-269	303022HHCS	170-028-330	Hex head capscrew
13	6195-270	303022LWSR	900-001-330	Lock washer
14	6195-271	303022CSGS	360-001-440	Casing gasket
15	6195-272	303022HCSR	170-003-115	Hex head capscrew
16	6195-176	303022MPLR	444-001-010	Impeller
17	6195-179	303022SHIM	740-001-115	Shim
18	6195-273	303022SCTC	258-001-157	Suction cover

Item No.	Part #	Plate #	Vender Part#	Description
19	6195-274	303022STRN	612-001-156	Strainer plate
20	6195-177	303022SCRN	700-001-330	Strainer screen
21	6195-275	303022CSVL	181-001-155	Casing volute 1 1/2 NPT
22	6195-276	303022RING	560-022-360	O-ring
23	6195-178	303022SEAL	720-005-000	Seal
25	6195-277	303022MTR	525-005-000	Motor
26	6195-278	303022CBCL	200-003-000	Cable clamp
27	6195-279	303022MCSC	706-007-330	Machine screw
28	6195-280	303022PWRC	150-036-000	Power cable assembly
29	6195-281	303022LCKW	900-002-330	Lock washer
30	6195-282	303022CMPL	510-003-000	Compression lug
	6195-181	303022CK	475-220-000	Cable conversion kit
	6195-283	303022SSKT	475-132-000	Shell & stud kit
	6195-180	303022EYE	321-001-330	Eye bolt
	6195-182	303022HK	475-238-000	Handle conversion kit
	6195-154	303022SCR	706-006-330	Handle screw
	6195-155	303022SW	825-002-000	Pump switch

Instructions for Handle Conversion

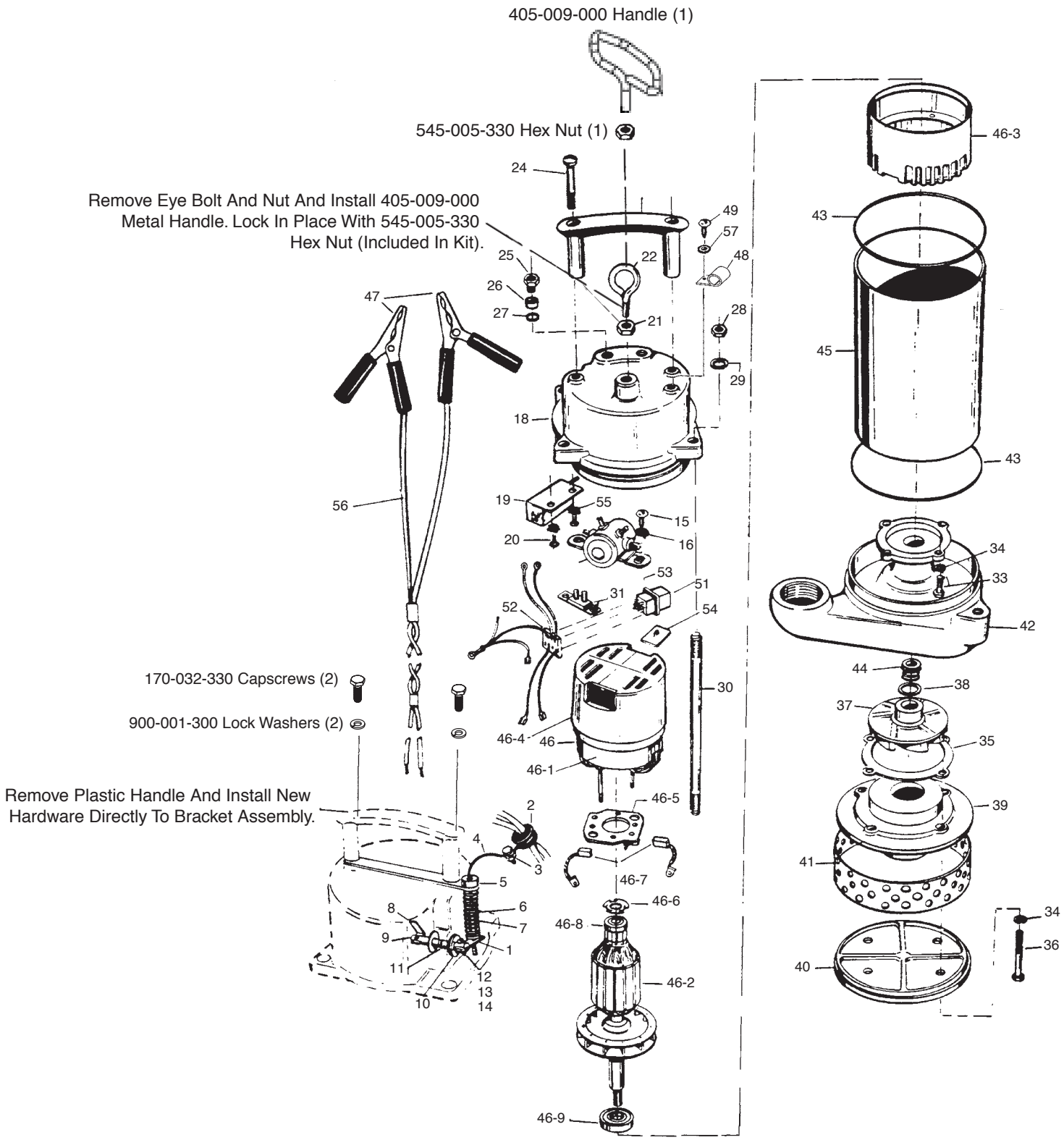

WARNING: It is unlawful in **CALIFORNIA & VERMONT (effective 1/1/2010); MARYLAND (effective 1/1/2012); LOUISIANA (effective 1/1/2013) and the UNITED STATES OF AMERICA (effective 1/4/2014)** to use any product in the installation or repair of any public water system or any plumbing in a facility or system that provides water for human consumption if the wetted surface area of the product has a weighted average lead content greater than 0.25%. This prohibition does not extend to service saddles used in California, Louisiana or under USA Public Law 111-380.