IMPORTANT NOTICE - READ CAREFULLY

Frostproof Sillcock Installation Instructions

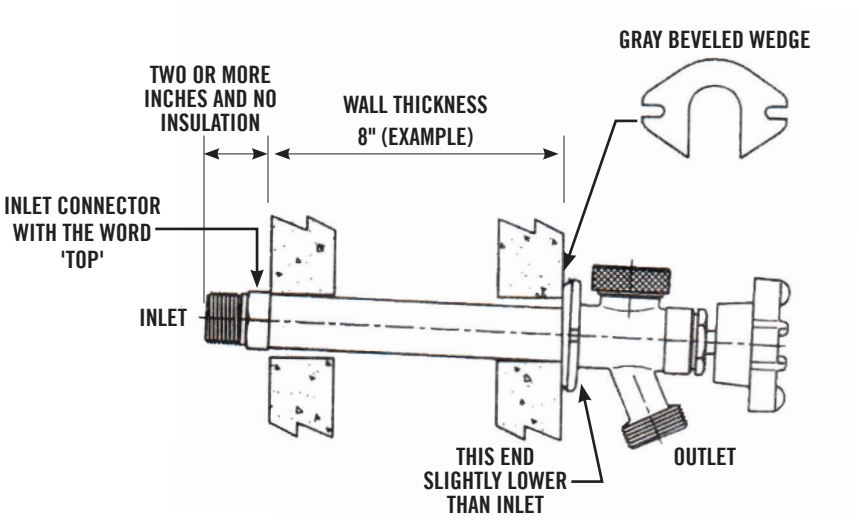

DO NOT INSTALL UNTIL YOU READ AND UNDERSTAND ALL INSTRUCTIONS. FAILURE TO FOLLOW THESE INSTRUCTIONS MAY RESULT IN PRODUCT FAILURE AND PROPERTY DAMAGE.

DO NOT OVERTIGHTEN OR OVERHEAT!

Manufacturer assumes no responsibility for failure, due to improper installation.

GENERAL INSTALLATION INSTRUCTIONS:

- Be sure to shut off main water supply before beginning installation.
- Do not overtighten or overheat!
- Test after installation.

HOW TO INSTALL

1. Select the correct length of Frostproof Sillcock. The length needs to be at least two inches longer than the wall thickness, on the inlet side (see example above). Do not insulate over the inlet connection! (NOTE: For geographic regions subject to freezing temperatures, it is recommended to install a length of six inches or more)
2. If an existing valve is being replaced, detach it from the exterior of the structure and disconnect it from the supply line.

   ~OR~

   If hole has not been drilled, you will need to drill a 1 1/4" hole through the foundation wall or the floor joist band and insert the sillcock from the outside.
3. Position the valve. From inside the structure, verify that it is in the correct position by making sure that the word 'TOP' on the inlet connector is facing upwards, which means that the outside spout is facing downwards.
4. Install the sillcock so that the outside spout is at a slight downward angle (approximately five degrees), toward the spout (this allows water to drain when it is shutoff). Place the gray beveled wedge (provided) between the outside wall and the sillcock flange, to assist in creating the downward angle.
5. Make inlet connection:
   - Soldered Connection: Open valve fully and remove the stem before applying heat. Be sure to direct the flame away from the valve. Do not overheat!

     Once it has cooled down, re-install the stem, and tighten with wrench.
   - Threaded Connection: Wrap pipe threads in the same direction as the threads and connect pipe to the valve. Do not over tighten!
   - Pex (F1807) Connection: Position copper crimp ring or stainless-steel clamp over barbed area and follow the crimp tool manufacturer's instructions to properly secure.
   - Expansion Pex (F1960) Connection: Place the expansion ring onto Pex-a tubing and then follow the Expansion Pex tool manufacturer's instructions to properly secure.
6. Secure sillcock flange with two screws and use appropriate masonry hardware, when attaching to brick or cement.

IMPORTANT: Turn sillcock handle to closed position and detach hose from spout during freezing weather. If hose is left attached, the frostproof sillcock cannot drain properly and trapped water may freeze and damage the valve.

WARNING: It is unlawful in **CALIFORNIA & VERMONT (effective 1/1/2010); MARYLAND (effective 1/1/2012); LOUISIANA (effective 1/1/2013) and the UNITED STATES OF AMERICA (effective 1/4/2014)** to use any product in the installation or repair of any public water system or any plumbing in a facility or system that provides water for human consumption if the wetted surface area of the product has a weighted average lead content greater than 0.25%. This prohibition does not extend to service saddles used in California, Louisiana or under USA Public Law 111-380.

IMPORTANT NOTICE - READ CAREFULLY

Frostproof Sillcock Installation Instructions

HOW TO REPAIR

- **Handle Broke:** Replace with repair handle (2010H - includes a handle for 72010 or 72011, name plate and screw)
- **Repair stem seat and spring needs replacing:** Order Stem Seat Repair Kit (72011RK - includes stem seat and spring)
- **Need to repair vacuum breaker and handle:** Replace with Handle and Vacuum Breaker Repair Kit (2011HTR - includes handle, screw, packing nut (x2), vacuum breaker assembly and chrome plated cap)
- **Leaking out of the top:** Replace with Vacuum Breaker Repair Kit (72011VBKT - includes vacuum breaker assembly and chrome plated cap)
- **Leaking out of the bottom:** Identify handle color and operation, so you know what stem repair kit is needed (Green/Multi-Turn = 72011MS and Tan/Quarter Turn = 72011QTMS). Then follow directions below…

1. Prior to performing service to the Frostproof Sillcock stem assembly, water supply to the unit must be shut off and the pressure drained from the valve. Repairs can be made without removing the product from the wall.
2. Remove handle screw, handle and name plate. Unscrew bonnet and remove two packing washers and packing. Using handle, unscrew stem assembly until threads disengage and slide out.
3. Remove old stem assembly/check sub-assembly…
   - If replacing Quarter Turn handle: Pull the stem straight out
   - If replacing Multi-Turn handle: Unscrew the stem counterclockwise
4. Then, remove old check spring. Replace with new check spring and check sub-assembly. Reinsert replacement stem assembly by following Steps 2 and 3, in reverse.

1- Identify the model of Frostproof Sillcock that is installed.

2- Measure overall (tip to tip) length of the stem.

3- Subtract 3 3/8” from overall length and that is the length of the repair stem that is required…

STEM OVERALL LENGTH:	STEM REPAIT KIT THAT IS NEEDED:
7 3/8”	1/2” x 4” (72011QTMS or 72011MS)
9 3/8”	1/2” x 6” (72011QTMS or 72011MS)
11 3/8”	1/2” x 8” (72011QTMS or 72011MS)
13 3/8”	1/2” x 10” (72011QTMS or 72011MS)
15 3/8”	1/2” x 12” (72011QTMS or 72011MS)
17 3/8”	1/2” x 14” (72011QTMS or 72011MS)
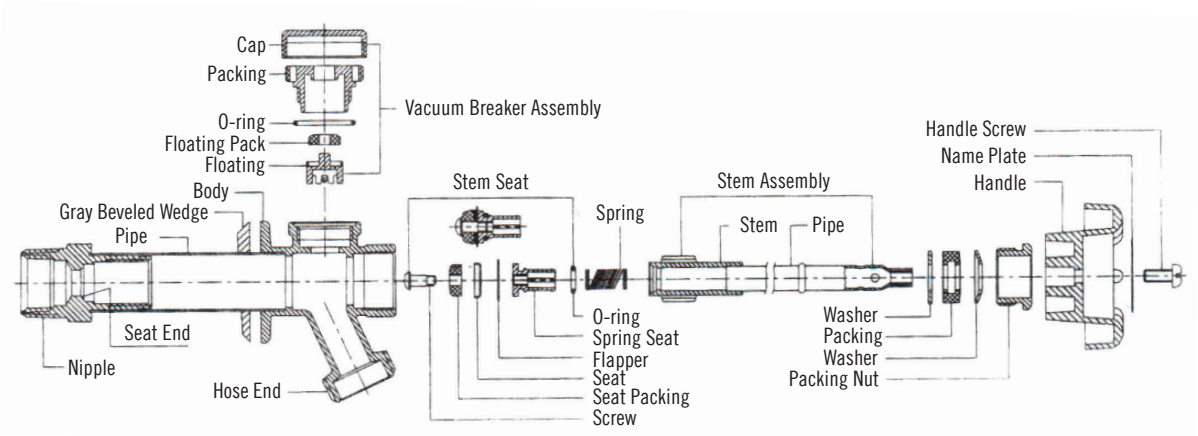
For example, based on the picture below, a 1/2" x 6” 72011QTMS (or 72011MS) would be needed.